DESCRIPTION OF CHANGE	REV
PRODUCT RELEASED - ADDITIONAL INFO ADDED	03

PART No. Pi71394 | Rev. 03

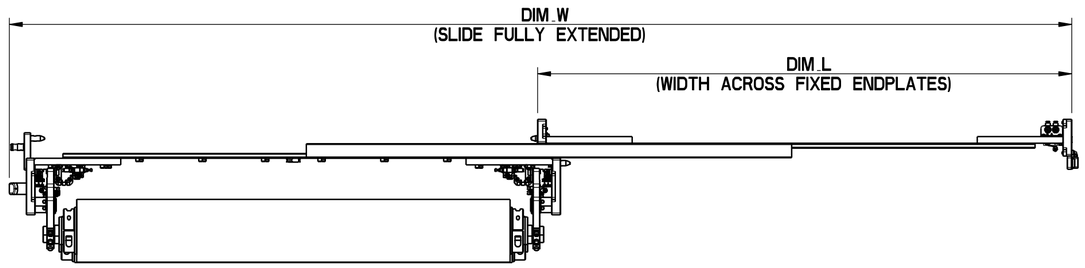

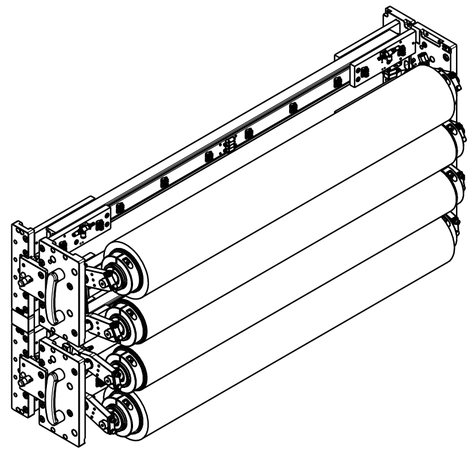

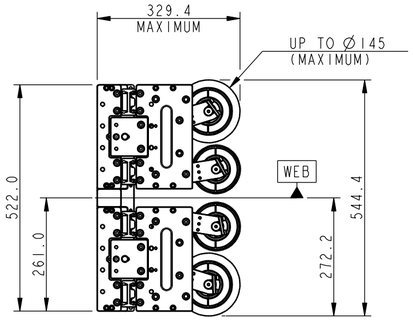

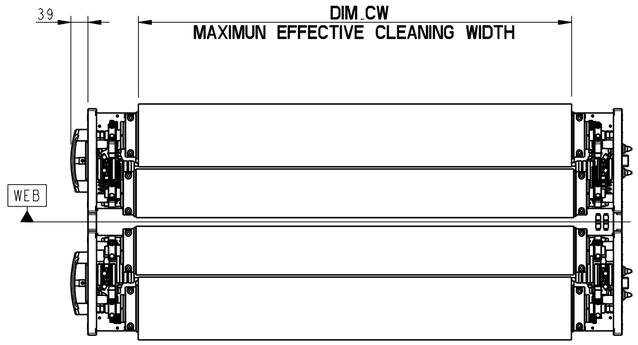

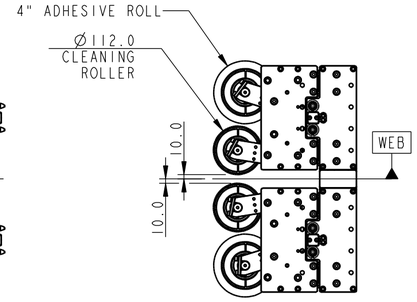

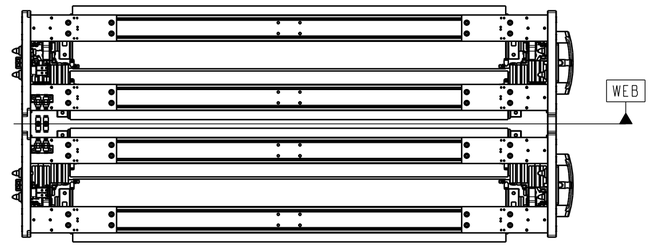

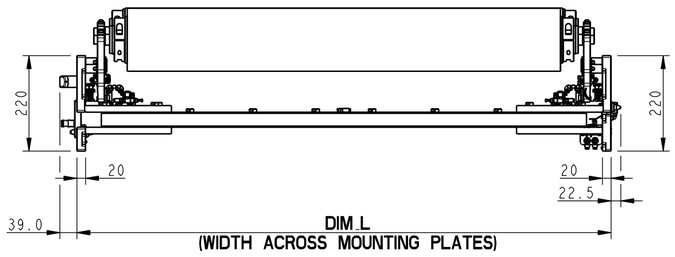

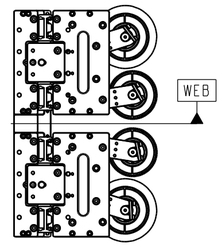

VERTICAL (VCH)
ORIENTATION

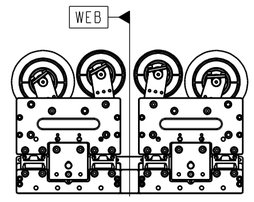

HORIZONTAL (HCH)
ORIENTATION

DOUBLE SIDED CLEANER WITH SLIDES FITTED

MACHINE	DIM_CW	DIM_L	DIM_W
UWC-1800-DS	1800	2032	4050
UWC-1700-DS	1700	1932	3850
UWC-1600-DS	1600	1832	3650
UWC-1500-DS	1500	1732	3450
UWC-1400-DS	1400	1632	3250
UWC-1300-DS	1300	1532	3050
UWC-1200-DS	1200	1432	2850
UWC-1100-DS	1100	1332	2650
UWC-1000-DS	1000	1232	2450

NOTES:

REV	DATE	ECN No.	ENG.
03	13.02.17	4484r05	BT
02	22.09.16	4484r01	BT
01	24.05.16	4484r01	BT

STD DESIGN SPEC. PI5487

DIMENSIONAL TOLERANCES UNLESS OTHERWISE STATED:
DIMENSION X. ± .50mm ANGLES X. ± 2.0°
X.X ± .25mm X.X ± 1.0°
X.XX ± .10mm X.XX ± 0.5°

ENGR: B. TYNAN DATE: 24.05.16

APP BY:

© 2016 TEKNEK ®

ALL PRODUCTS DESIGNED, DEVELOPED AND MANUFACTURED BY TEKNEK ARE PROTECTED BY COPYRIGHT, UNREGISTERED DESIGN RIGHT AND, WHERE APPROPRIATE, PATENT OR REGISTERED DESIGN. NO ELEMENT OF ANY PRODUCT SHOULD BE COPIED WITHOUT THE PRIOR WRITTEN PERMISSION OF TEKNEK.

TEKNEK
River Drive, Inchinnan
PA4 9RT, Scotland, United Kingdom
Telephone: +44 (0) 141 568 8100
E-mail: teknek:@teknek.com
Web: http://www.teknek.com

teknek
An ITW Company

MATERIAL:
FINISH:
SCALE: 1:10 SHEET 1 OF 4

PROJECT: UNIVERSAL CLEANING HEAD
TITLE: ASSY, UWC-1000-DS (SLIDES)
DRG SIZE: A2 PART No. Pi71394 Rev. 03

DESCRIPTION OF CHANGE	REV
SEE SHEET - 1	03

PART No. Pi71394 | Rev. 03

UWC-1800-DS	1800	2032
UWC-1700-DS	1700	1932
UWC-1600-DS	1600	1832
UWC-1500-DS	1500	1732
UWC-1400-DS	1400	1632
UWC-1300-DS	1300	1532
UWC-1200-DS	1200	1432
UWC-1100-DS	1100	1332
UWC-1000-DS	1000	1232
MACHINE	**DIM_CW**	**DIM_L**

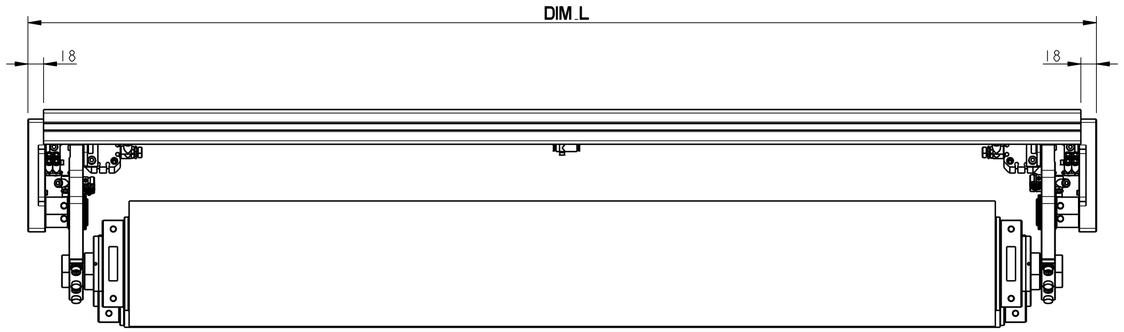

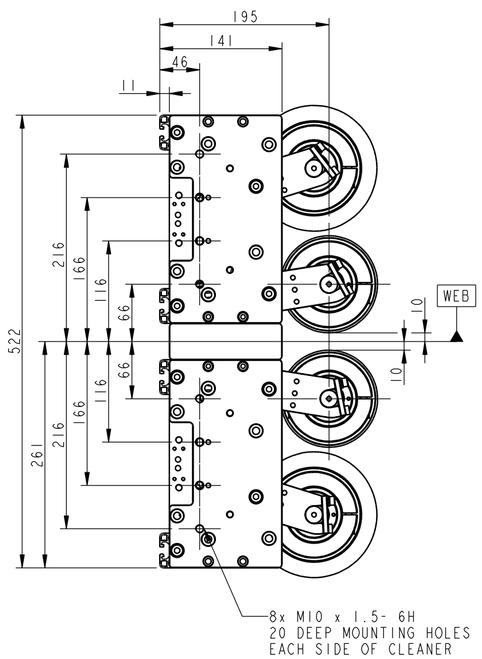

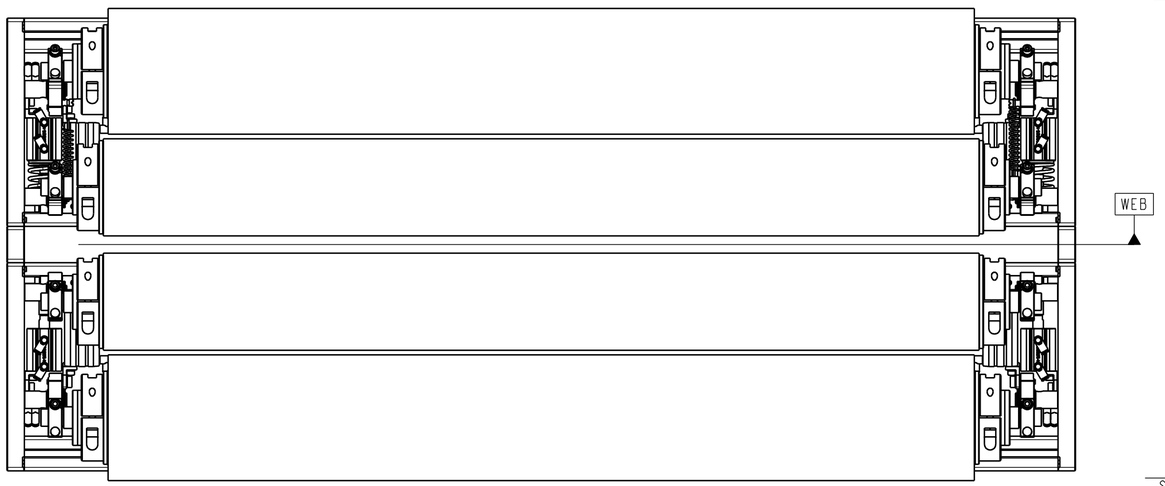

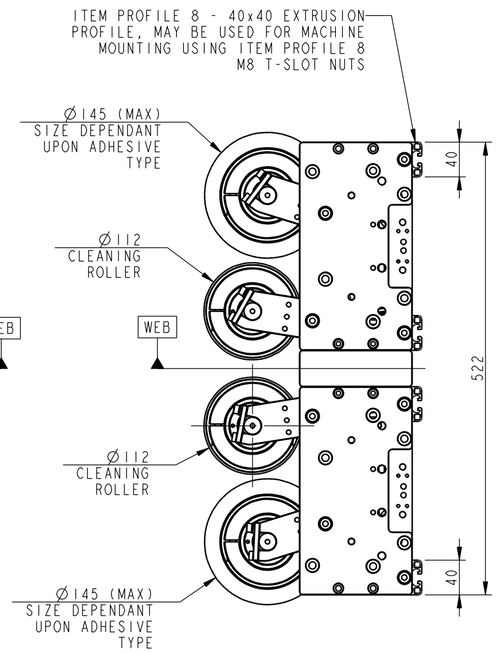

DOUBLE SIDED CLEANER - NO SLIDES FITTED

NOTES:

REV	DATE	ECN No.	ENG.
03	13.02.17	4484r05	BT
02	22.09.16	4484r01	BT
01	24.05.16	4484r01	BT

STD DESIGN SPEC. Pi5487

DIMENSIONAL TOLERANCES UNLESS OTHERWISE STATED:
DIMENSION X. ± .50mm ANGLES X. ± 2.0°
X.X ± .25mm X.X ± 1.0°
X.XX ± .10mm X.XX ± 0.5°

ENGR: B. TYNAN DATE: 24.05.16

APP BY:

© 2016 TEKNEK ®

ALL PRODUCTS DESIGNED, DEVELOPED AND MANUFACTURED BY TEKNEK ARE PROTECTED BY COPYRIGHT, UNREGISTERED DESIGN RIGHT AND, WHERE APPROPRIATE, PATENT OR REGISTERED DESIGN. NO ELEMENT OF ANY PRODUCT SHOULD BE COPIED WITHOUT THE PRIOR WRITTEN PERMISSION OF TEKNEK.

TEKNEK
River Drive, Inchinnan
PA4 9RT, Scotland, United Kingdom
Telephone: +44 (0) 141 568 8100
E-mail: teknek:@teknek.com
Web: http://www.teknek.com

teknek
An ITW Company

MATERIAL:
FINISH:
SCALE: 1:10 SHEET 2 OF 4

PROJECT: UNIVERSAL CLEANING HEAD
TITLE: LAYOUT, DOUBLE SIDED CLEANING HEADS
DRG SIZE: A2 PART No. Pi71394 Rev. 03

DESCRIPTION OF CHANGE	REV
SEE SHEET - 1	03

PART No. Pi71394 | Rev. 03

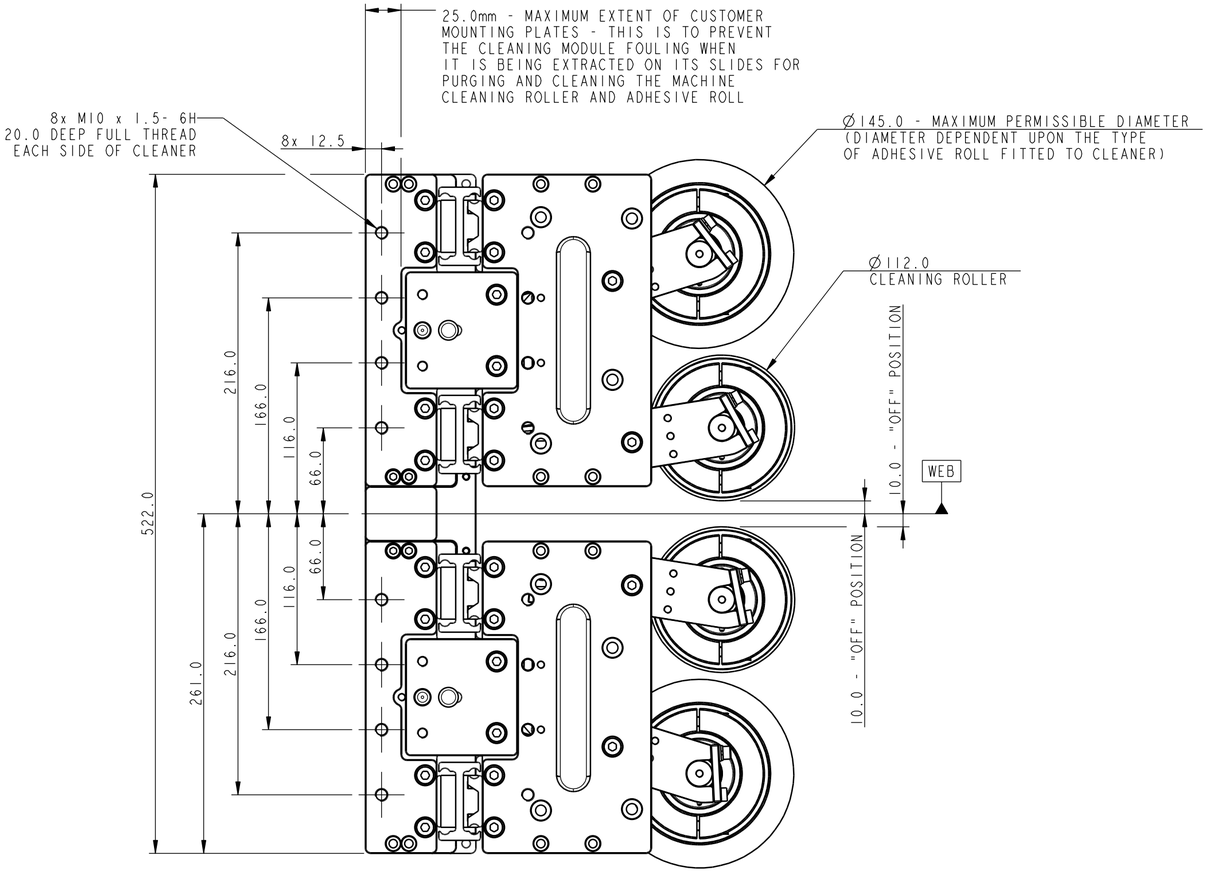

END PROFILE - DOUBLE SIDED CLEANER WITH SLIDES FITTED

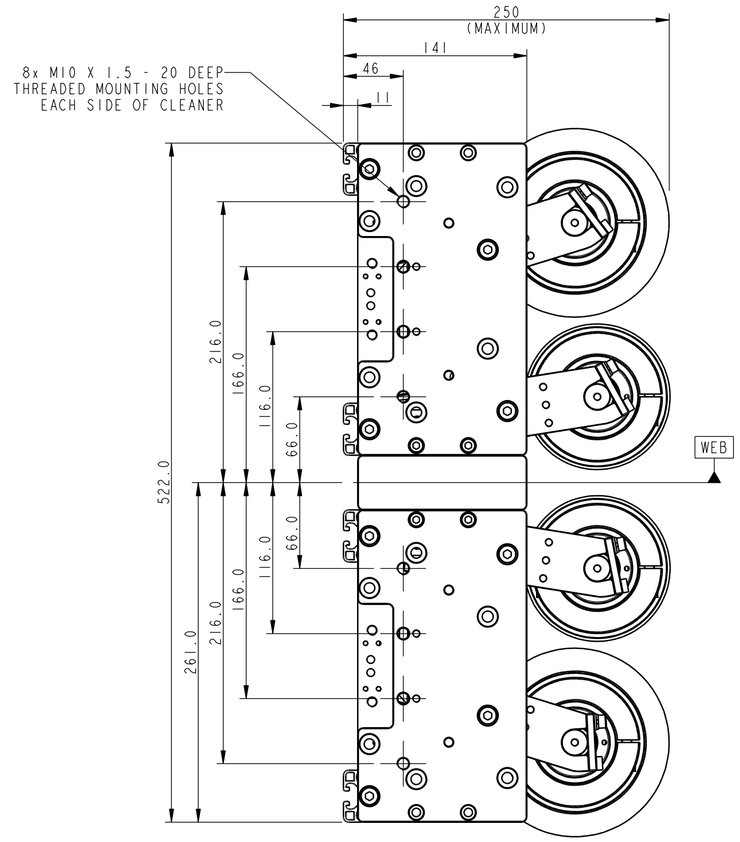

END PROFILE - DOUBLE SIDED CLEANER NO SLIDES FITTED

NOTES:

REV	DATE	ECN No.	ENG.
03	13.02.17	4484r05	BT
02	22.09.16	4484r01	BT
01	24.05.16	4484r01	BT

STD DESIGN SPEC. PI5487

DIMENSIONAL TOLERANCES UNLESS OTHERWISE STATED:
DIMENSION X. ± .50mm ANGLES X. ± 2.0°
X.X ± .25mm X.X ± 1.0°
X.XX ± .10mm X.XX ± 0.5°

ENGR: B. TYNAN DATE: 24.05.16

APP BY:

© 2016 TEKNEK ®
ALL PRODUCTS DESIGNED, DEVELOPED AND MANUFACTURED BY TEKNEK ARE PROTECTED BY COPYRIGHT, UNREGISTERED DESIGN RIGHT AND, WHERE APPROPRIATE, PATENT OR REGISTERED DESIGN. NO ELEMENT OF ANY PRODUCT SHOULD BE COPIED WITHOUT THE PRIOR WRITTEN PERMISSION OF TEKNEK.

TEKNEK
River Drive, Inchinnan
PA4 9RT, Scotland, United Kingdom
Telephone: +44 (0) 141 568 8100
E-mail: teknek:@teknek.com
Web: http://www.teknek.com

teknek
An ITW Company

MATERIAL:
FINISH:
SCALE: 3:10 SHEET 3 OF 4

PROJECT: UNIVERSAL WEB CLEANER
TITLE: LAYOUT, DOUBLE SIDED CLEANING HEADS
DRG SIZE: A2 PART No. Pi71394 Rev. 03

DESCRIPTION OF CHANGE	REV
SEE SHEET - 1	03

PART No. Pi71934 | Rev. 03

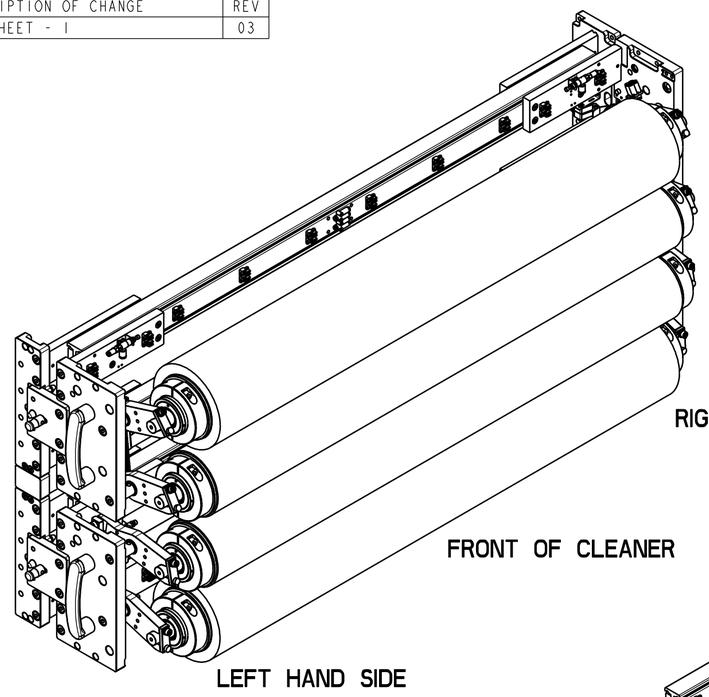

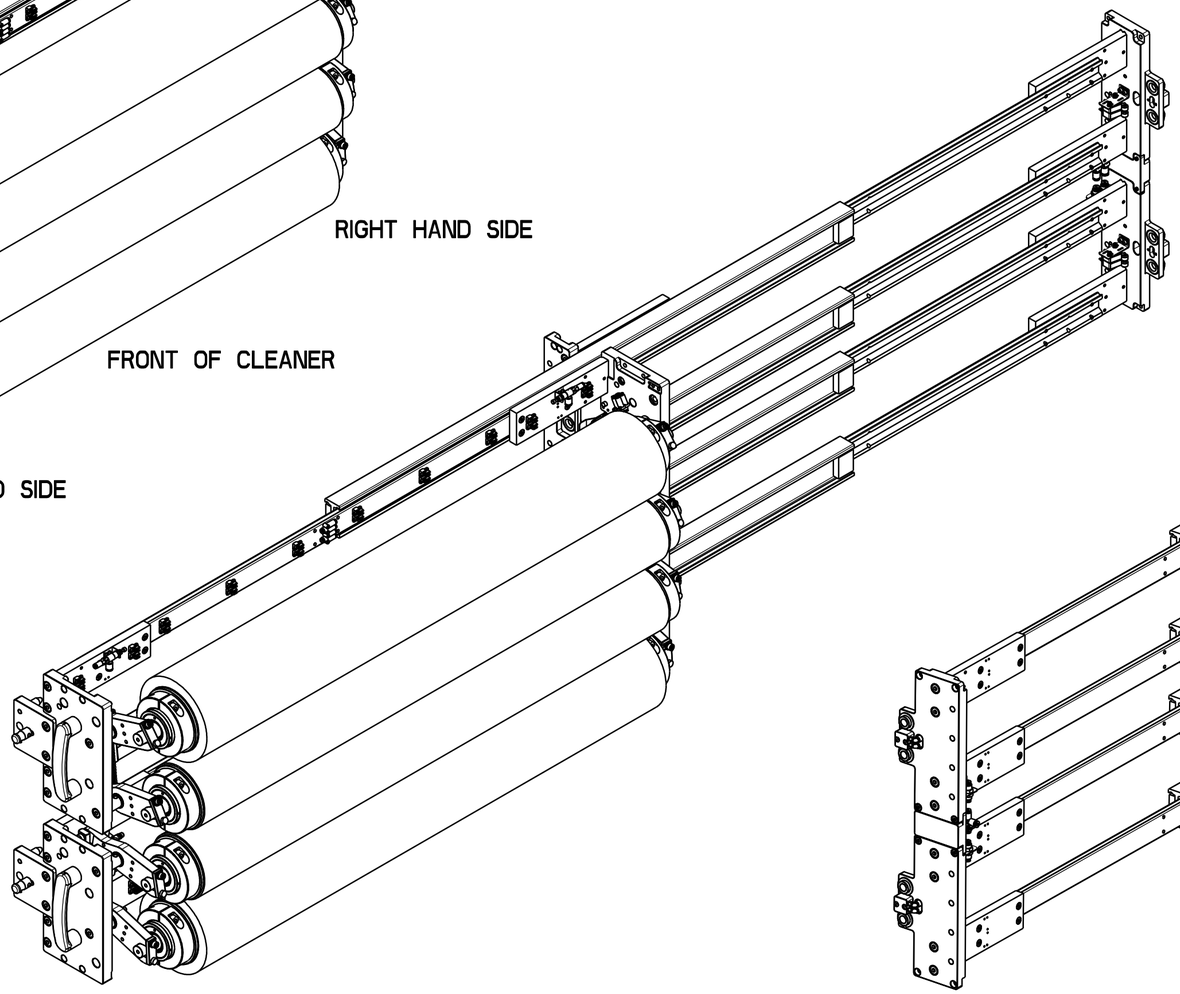

THIS VIEW REPRESENTS LEFT HAND SIDE SLIDE OUT DIRECTION

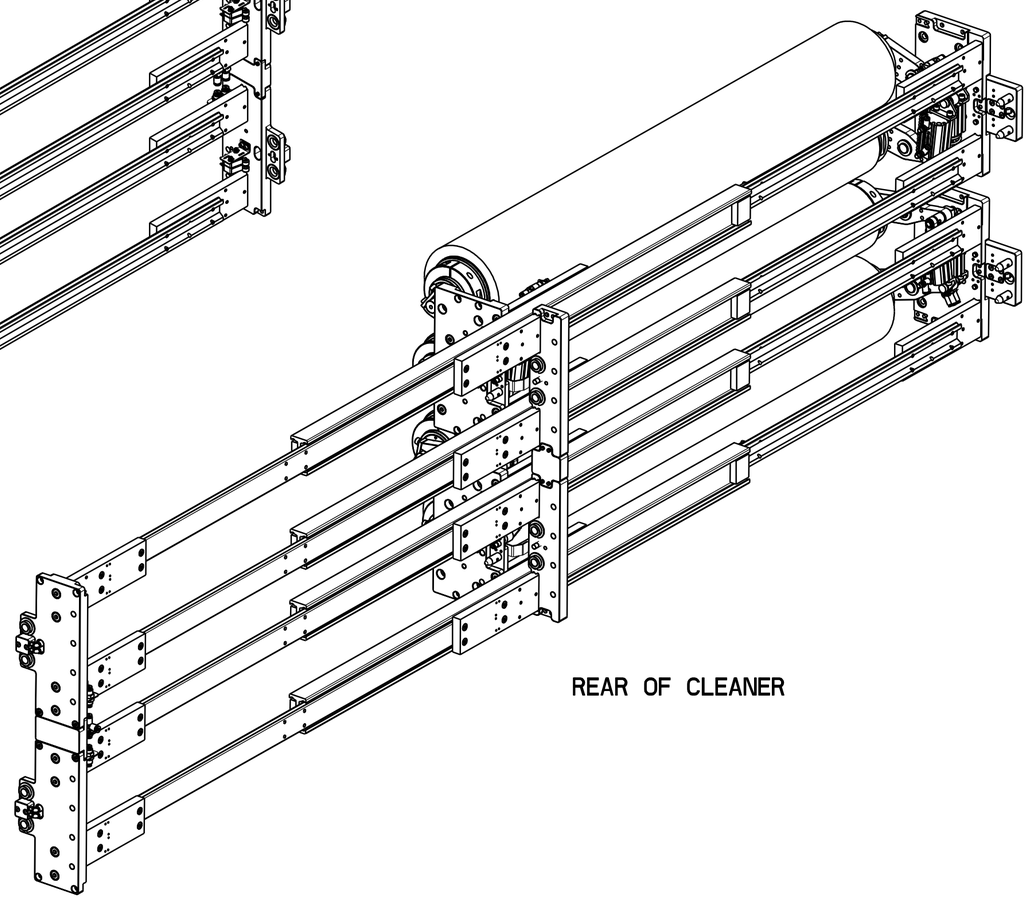

REAR OF CLEANER

NOTES:

REV	DATE	ECN No.	ENG.
03	13.02.17	4484r05	BT
02	22.09.16	4484r01	BT
01	24.05.16	4484r01	BT

STD DESIGN SPEC. Pi5487

DIMENSIONAL TOLERANCES UNLESS OTHERWISE STATED:
DIMENSION X. ± .50mm ANGLES X. ± 2.0°
X.X ± .25mm X.X ± 1.0°
X.XX ± .10mm X.XX ± 0.5°

ENGR: B. TYNAN DATE: 24.05.16

APP BY:

© 2017 TEKNEK ®

ALL PRODUCTS DESIGNED, DEVELOPED AND MANUFACTURED BY TEKNEK ARE PROTECTED BY COPYRIGHT, UNREGISTERED DESIGN RIGHT AND, WHERE APPROPRIATE, PATENT OR REGISTERED DESIGN. NO ELEMENT OF ANY PRODUCT SHOULD BE COPIED WITHOUT THE PRIOR WRITTEN PERMISSION OF TEKNEK.

TEKNEK
River Drive, Inchinnan
PA4 9RT, Scotland, United Kingdom
Telephone: +44 (0) 141 568 8100
E-mail: teknek:@teknek.com
Web: http://www.teknek.com

teknek
An ITW Company

MATERIAL:
FINISH:
SCALE: 1:10 SHEET 4 OF 4

PROJECT: UNIVERSAL WEB CLEANER
TITLE: LAYOUT, DOUBLE SIDED CLEANING HEADS
DRG SIZE: A2 PART No. Pi71934 Rev. 03